Positive Displacement Meters for Liquid Measurement

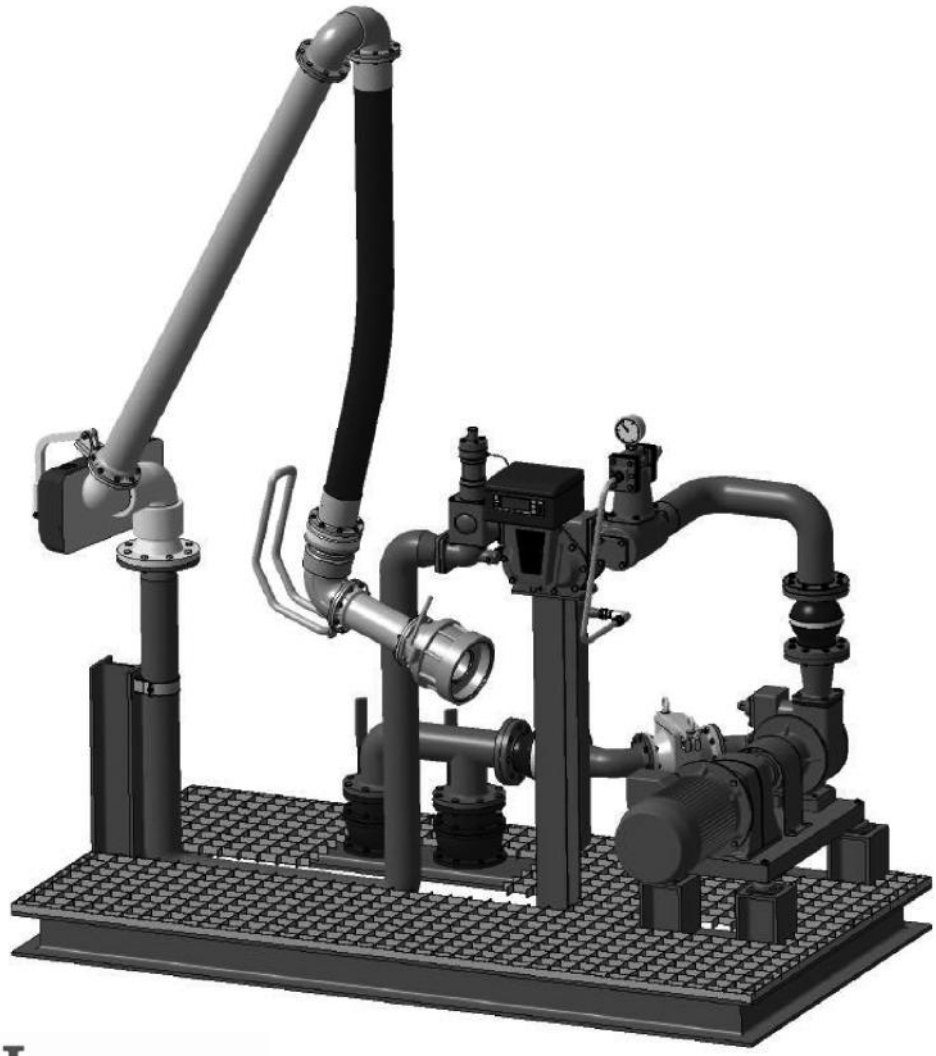

TOTAL CONTROL SYSTEMS

"The Standard of Measurement"

AUTHORIZED DISTRIBUTOR:

Accu-Flo Meter Service Ltd.

1-800-921-ACCU

OVERVIEW

Total Control Systems is a manufacturer of flow measurement systems for the custody transfer. This technical document is to examine the positive displacement (PD) flow meter design principles, indicating and recording elements and flow control elements used within typical metering systems. Typical illustrations of metering systems will then discussed on how to achieve the best accurate performance.

HISTORY

PD meters have been in existed for more than a century. By the late 1930's, PD meters were used extensively in custody transfer measurement applications, such as service stations, tank trucks, loading terminals and pipelines.

Throughout history, PD meters have proven to be the most accurate means of petroleum measurement in the industry because of their high accuracy, stability; volume directly measured, low pressure loss and the ability to measure liquids without flow conditioning.

PD METER PRINCIPLE

Most PD meters consist of the Housing and Measurement Element.

Housing

The housing serves as the pressure vessel in which contains the Measurement Element. It must have an inlet and outlet connection, to channel liquid through the measurement element. Housing pressure ratings vary dependent on the design, metallurgy and system pressures.

Housings can be either a single or dual case construction. In a single case construction, the housing serves as both pressure vessel and measuring element. In the double case construction, the measurement element is surrounded by a separate external housing.

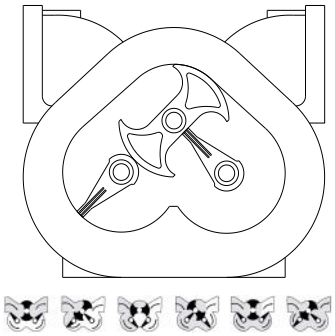

Rotary Piston

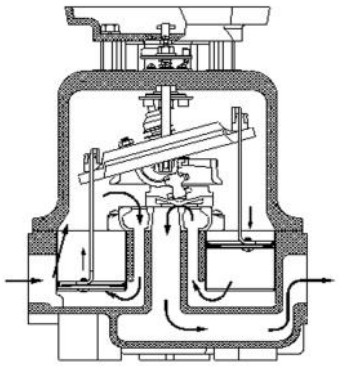

Reciprocating Piston

Measurement Chamber

The measuring chamber (element) is the design principle of the PD meter. The liquid volume is separated into a known quantity as it flows through the measuring chamber.

Each measurement chamber will have its own unique characteristics, including Accuracy, Friction Loss, Pressure Drop, Debris Tolerance, Driving Torque and Size/Weight.

The following are examples of Positive Displacement measurement principles.

Oscillating Pis-

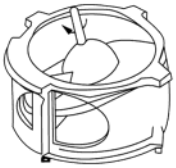

Nutating Disc

Rotary Vane

Rotary Lobe

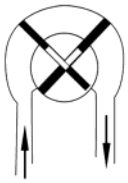

Rotary Vane

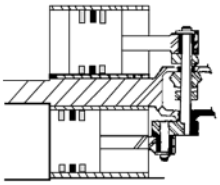

Reciprocating Pis-

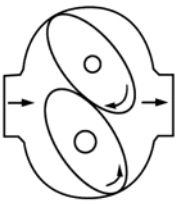

Rotary Gear

Rotary Lobe

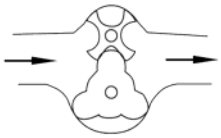

Helical Rotor

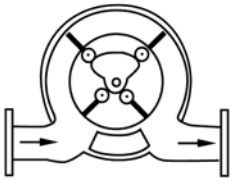

Rotary Vane

Meter Selection
In order to chose the correct PD meter for a product application, you must first consider the product characteristics and system conditions.

Information regarding the product characteristics can be further reviewed in the TCS Engineering Manuals to help determine the correct flow meter.

A) Material Compatibility
The product intended to be measured must be evaluated to find suitable material compatible to handle the fluid correctly. Materials incompatible with product will potentially reduce accuracy, operation life, contaminate liquid and may be harmful to others.

B) Flow Rate
The minimum and maximum system rate of flow must be determined for the selection of flow meter. The flow rate of the system is dependent upon the product viscosity, the desired meter configuration, the systems pump capabilities, and the plumbing configuration.

C) Pressure
The maximum working pressure allowed should be reviewed under flow meter type and pressure rating. Failure to adhere to the maximum allowable pressure may potentially cause a seal leak or casting rupture.

D) Temperature
The operating temperature has a great effect on the meter seals and its relationship to the maximum pressure allowed with the flow meter castings. It will be necessary to reduce the maximum rated working pressure as the operating temperature increases. Any metering system operating over 160F (71C) will require extra clearance rotors to compensate for material expansion. Any metering system operating over 180F (82 C) will require at least a one (1) foot registration extension to protect the registration devices. Increase in temperature may increase the corrosion rate of some products.

E) Lubricity
The lubricity or non-lubricity of the product will determine the bearing material suitable for use. Products with no lubrication will require the use of Carbon Graphite, Teflon or Ceramic bearings. Products with lubrication will reduce friction between two metal surfaces and help dissipate heat.

F) Foreign Materials
Products that are to be measured may have foreign materials present. The inlet side of any positive displacement meter should be equipped with a strainer. Matching the strainer size or one size larger, with an appropriate size screen will protect the meter and accessories from damage in the system. A minimum of 40-mesh screen is recommended for petroleum service. A minimum of 100-mesh screen is recommended for liquefied petroleum gas.

G) Suspensions & Suspended Solids
Products with a low percentage of soft suspensions or suspended solids will require clearance rotors and/or Ceramic bearings to protect from its abrasive effects. Due to the very tight machining tolerances in the 700 rotary meter, any solid larger than the thickness of a piece of paper, has the potential of stopping the flow and can cause damage to the meter. High percentages (5%) of suspensions or suspended solids, or any hard solids, such as sand, are not recommended. Some suspended solids are acceptable for the 682 piston meter.

H) pH
The metal resistance to the effects of high or low PH varies because of the chemical's different concentrations and corrosive properties. See Engineering Guide for assistance.

I) Viscosity
Viscosity is the property of a fluid that is a measure of its resistance to flow. Among the earliest to express this quantitatively was Sir Isaac Newton. He reasoned that the viscosity of a liquid was proportional to its shear stress (or resistance to shear). Liquids that behave in this manner are referred to as "Newtonian" liquids and are typically petroleum fluids, water and similar chemicals.

J) Pressure Loss
The pressure drop is the difference between of the inlet and outlet pressure of the flow meter while operating. When measuring a liquid, the pressure drop will increase as the flow rate increases. When the metering system has accessories such as an air eliminator or valve, these items will be approximately the same pressure drop through equivalent size meter.

The product viscosity will also have a direct relationship on the flow rate of the system. The higher viscous fluid, the higher the pressure loss. If the metered product has a high viscosity, it will be necessary to decrease the flow rate of the meter to reduce the strain on the flow meter.

K) Products that Dry/Congeal/Crystallize
There are many liquids that crystallize, harden and/or solidify on contact with air or with an increase in temperature. A proper system design and a good understanding of the product being measured will help to avoid the possibility of air entering into the system and the product being affected.

INDICATING & RECORDING ELEMENT
Each measuring chamber will provide a mechanical output to display the flow indication and recording element. There are three basic methods or devices used for the flow data output: mechanical registration, a pulse output transmitter and electronic flow computers.

Mechanical Registration
The mechanical register counters are designed to calculate the PD meter output into a volumetric measurement. A gear ratio calculates the known volume measurement into a unit of measure (Gallons, Liters, Dekaliters, etc.).

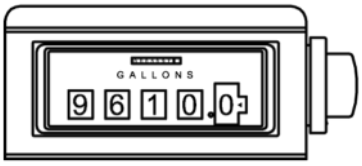

Each PD Meter has a Calibration Adjuster, whether internal or external to the meter assembly. This Calibration Adjuster will make fine adjustments to the volume measurement of the PD meter, changing the Mechanical Register volume measurement to the known liquid volume measurement.

Pulse Transmitter
The Pulse Transmitter was designed to provide accurate pulse output signal for remote indication, totalizers and data monitoring systems.

A pulse output is the conversion of the mechanical rotation of the flow meter into a precise ratio of electronic pulses per volume. A shaft encoder transmits the single or dual channel (quadrature) square wave frequency. An overlapping (quadrature) output permits the detection of direction of rotation and errors on either channel but not both concurrently. The single channel devices are used when greater pulse density is desired and error detection is not required.

The pulse transmitters are available from a direct drive off the meter chamber and a mechanical or electronic register counter.

Electronic Flow Computer
An electronic flow computer is capable of receiving the pulse output of the PD meter, enhancing the meter system accuracy, security and productivity. Electronic flow computers provide a resettable and totalizer display, flow control, temperature volume correction, density correction, ticket printing and electronic communication. Other options available are point-of-sale (POS), data capture, auto-batch, data management, route control, GPS, etc.

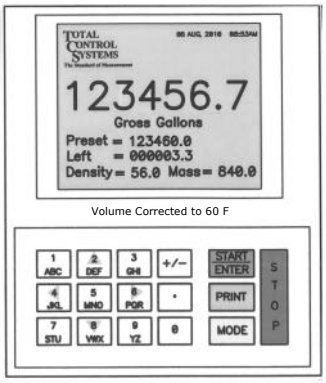

FLOW CONTROL SYSTEM
A number of separate operating elements work together to assure the safe, efficient and accurate operation of a metering system. To correctly engineer a custody transfer measuring system, you must first understand the application. Every accurate measuring system has a pump, filter, air/vapor elimination and valve control.

<u>Pumps</u>
There are many pump technologies, but two recommended pumping principles are positive displacement and centrifugal.

The positive displacement volumetric pump can pull and push product through a piping system. Recommended for loading and unloading, especially for stripping tanks and piping of product.

The centrifugal pump can efficiently push product through piping systems, but requires tank head pressure to get product to the pump.

Filtration

Proper filtration is necessary to protect the metering system from debris. On new installations, care must be taken to protect the meter from damage during start-up. It is recommended to put a strainer before the meter.

Damage may result from the passage through the meter of dirt, sand, welding slag or spatter, thread cuttings, rust, etc. The insertion of a spool (a flanged length of pipe equal in length to the meter and accessories attached to the meter) in place of the meter until the system is flushed, temporarily bypassing the plumbing around the meter, will also protect the meter from debris. Once the system has run "clean" for a period of time the meter maybe reinstalled or protective devices removed.

Air/Vapor Removal

An air eliminator is a device designed to extract free or accumulated volumes of air or vapor from a liquid dispensing system before it reaches the flow meter. As a PD meter, air will be measured along with fluid, resulting in more volume measured than actual. Each air eliminator must be vented atmospheric pressure, vented back to a storage tank or into a special "catch" tank. The "catch" tank can be necessary because fluid can be mixed with air during removal.

Illustration 1: Top view of single air eliminator installation

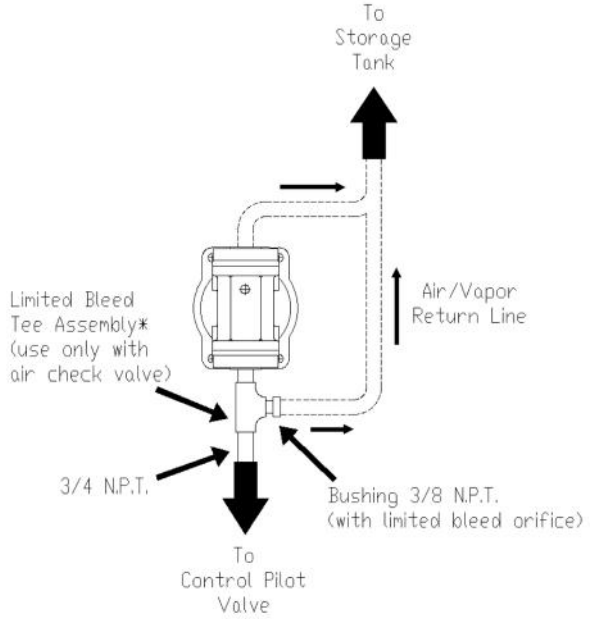

TCS offers many types of air or vapor eliminators; the standard reed curtain and float mechanism is present in the 740 air/vapor eliminator and strainer, 745 air eliminator and high volume strainer and the 747 bulk plant air eliminator. The 749 Air Separator is a system designed to continuously separate and remove, any air or vapor contained in the liquid (entrained air).

The vent pipe installation is very important for Air Elimination to function correctly and remove air at full capacity. Full size vented pipe must be used without restriction. See illustrations 1 & 2.

Illustration 2: Top view of dual bulk air eliminator installation

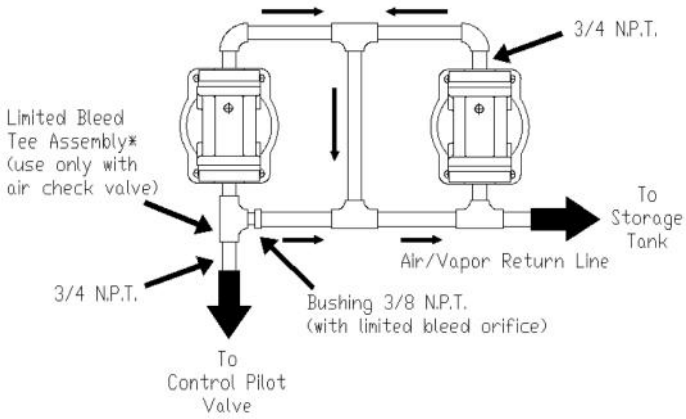

Control Valves

There are many valve principles used in system design, but each are used for different reasons to provide system control. Valves can be actuated by digital, pneumatic or hydraulic means. Examples are predetermining (preset or batch), rate of flow, back flow preventing (check), air differential (air check), thermal relief, pressure sustaining, pressure relief, pressure differential and flow limiting (governor) control valves. Safety and isolation valves should be used throughout the metering system. In any pumping system where there is one (1) pump and multiple flow meters, a digital or hydro-mechanical Rate-of-Flow control valve must be used at each flow meter to prevent over speeding of the flow meters.

Calibration

Each meter shall be tested and calibrated with the product it is intended to measure when installed. It is necessary to install a means for calibration of the flow meter, usually with a bypass plumbed into the system.

APPLICATION DESIGN
Every application has unique requirements to provide the most accurate measurement. Mobile tankers involve the delivery of product to homes, businesses, aircraft, fleets or storage. Terminal applications involve product loading and unloading; either by bottom or top fill. Blending applications involve accurate measurement with either splash, sequential, ratio or side (wild) stream systems that combine multiple products. Dispensers involve commercial or retail measuring systems that fill airplanes, automobiles, boats, locomotives and trucks.

The following are general methods to achieve accuracy in typical measurement applications. Total Control Systems does not recommend these system designs to be used within engineering schematic drawings. It is the consumers responsibility to utilize high professional engineers for proper system design. The following loading and unloading information does not apply to liquefied petroleum gases, liquefied natural gases or compressed natural gases.

Mobile Unloading
Mobile tanks often have multiple compartments to carry a variety of fuels. When the meter assembly includes a 760 Air Check Valve, to help ensure removal of free air within the system, the 730 Air Eliminator valve plate should be carefully reconfigured. The valve plate will be flipped, so that the small hole (1/16th") can be placed over the Air Eliminator internal manifold. This is done so that when the 760 Air Check Valve return line is attached to the 730 Air Eliminator, you will be able to relieve the pressure from the 760 Air Check Valve. A visual indication will be displaced on the top of the valve plate to show that the small hole is correctly in place.

NOTE: Failure to turn valve plate upside down while in operation with Air Check Valve will cause the liquid flow to stop and possibly damage 760 Air Check Valve.

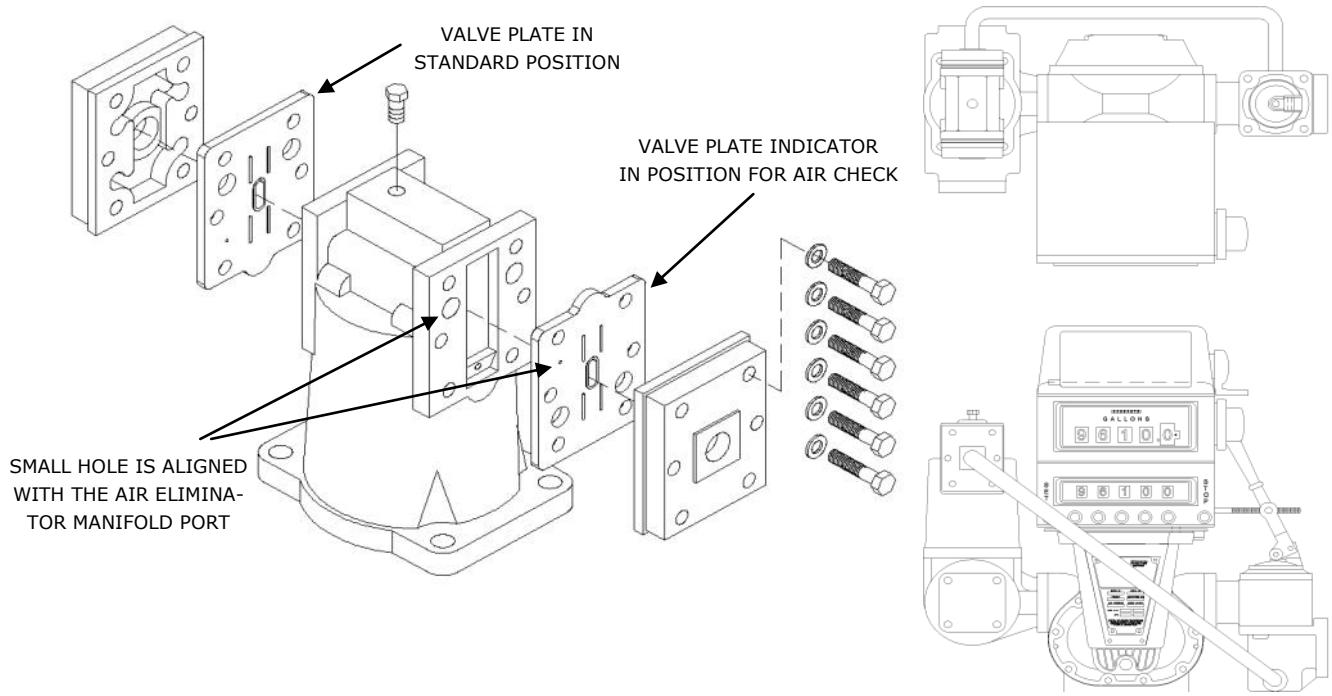

Unloading
When unloading product from mobile tankers into storage, pumps will strip the tankers clean of product. It is common for pumps to push large amounts of free air, which will be pushed into the metering system. To ensure accurate measurement, a bulk air eliminator and air differential valve should be used to eliminate the free air.

UNLOADING ILLUSTRATION

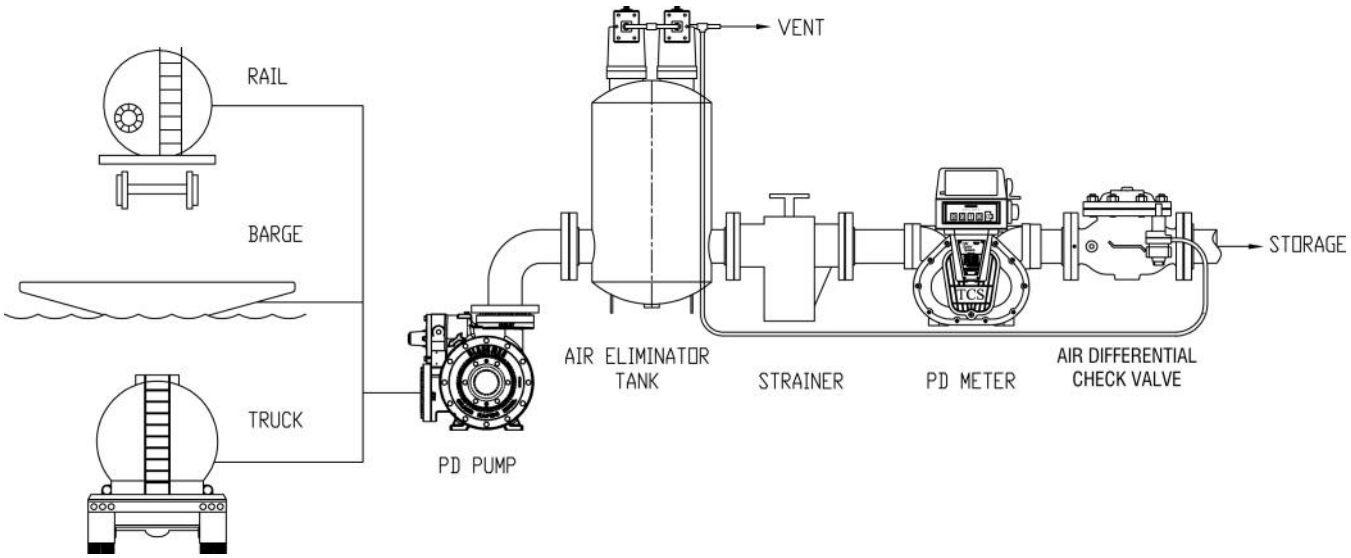

Loading

When loading product from storage to transports, there are two basic methods: bottom and top loading. The means for accurate measurement depends on the type of storage tank (underground or above ground) and pump configuration, as well as the safety requirements. Check with your local, state or federal building requirements to ensure each system is constructed correctly.

Air elimination is essential for accurate performance in a loading facility. However some installations do not require air elimination, where the pump is located near the storage tank (flooded suction) and/or has a low level sensor in the storage tank to shut off pump.

Control valves are essential to ensure safety, protection from contamination and the quantity delivered in each bulk plant installation. The different types of valves used in loading applications are Fire/Emergency Valves, Isolation Block Valves, Back Flow Check Valves, Thermal Expansion-Relief Valves, Pressure Sustaining-Reducing Valves, Flow Limiting (Governor) Valves, Anti-Siphon Valves and Preset Valves.

LOADING ILLUSTRATION 1

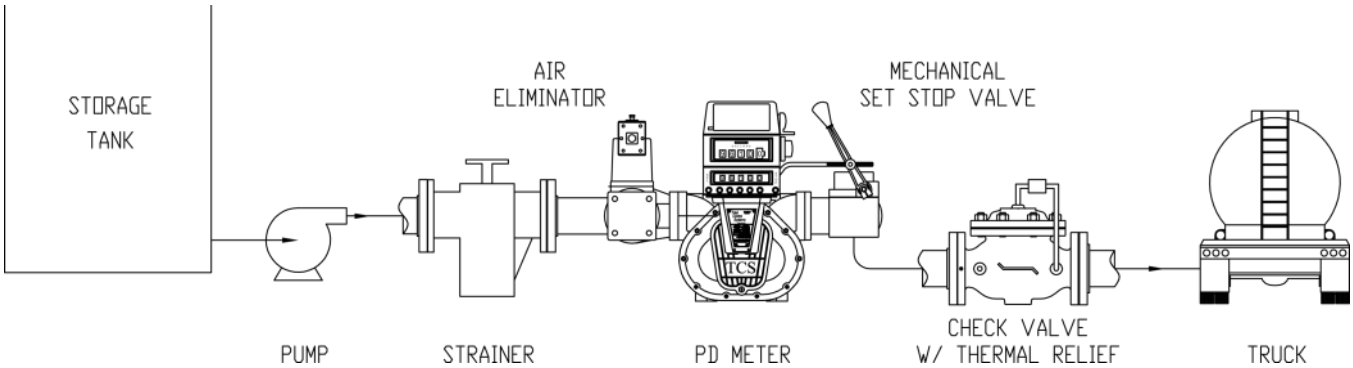

LOADING ILLUSTRATION 2

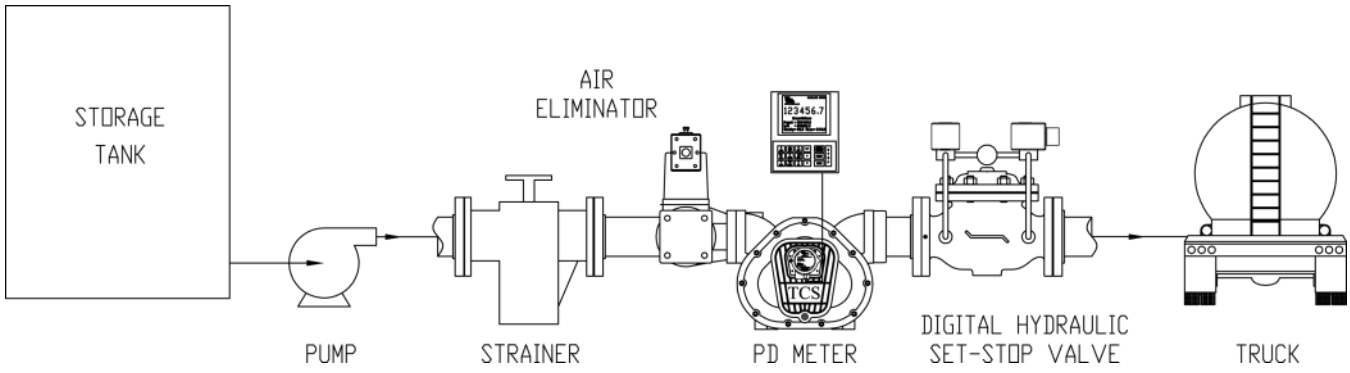

LOADING ILLUSTRATION 3

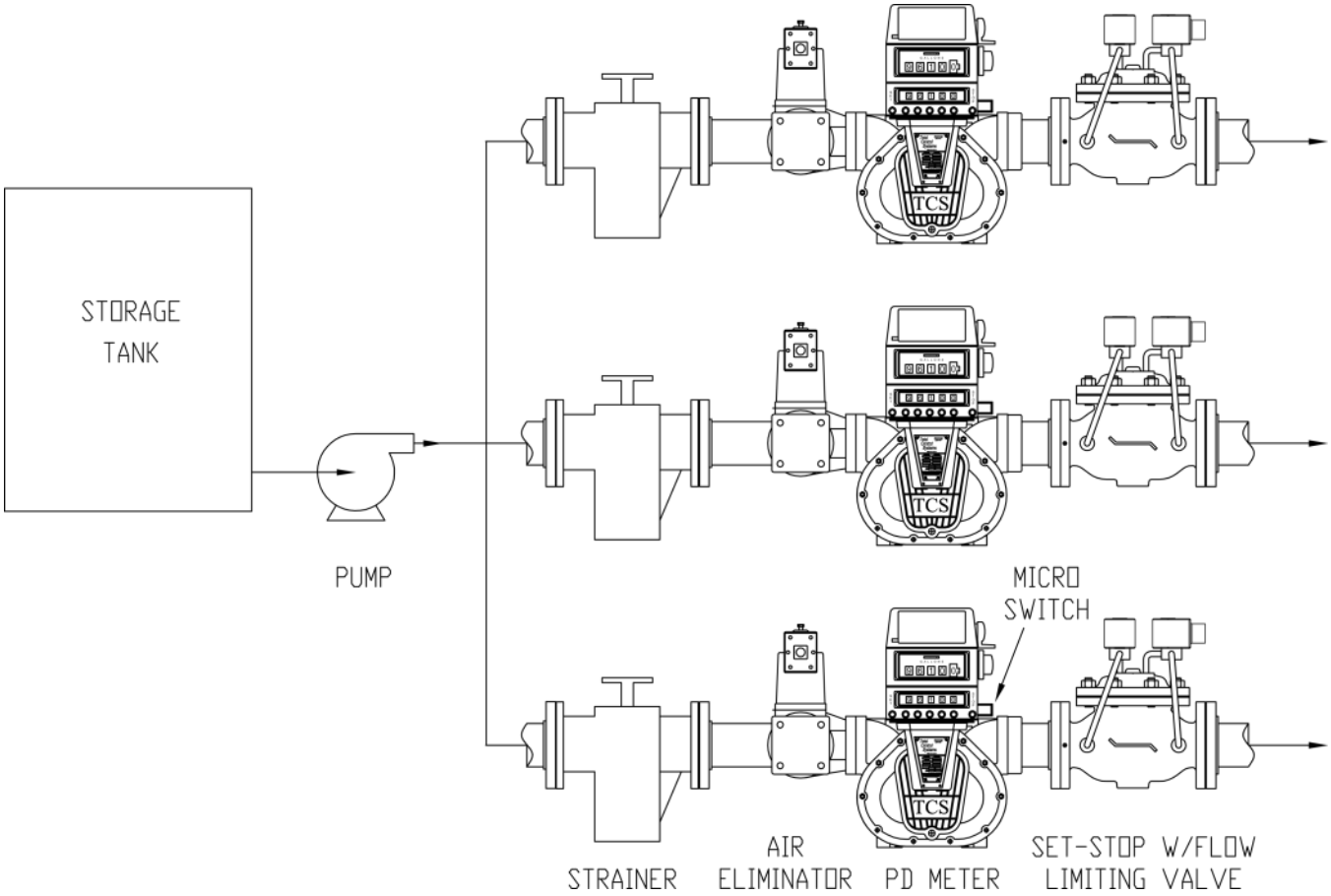

NOTES: These simplified diagrams indicate primary components used for custody transfer applications. All sections of the line that may be blocked between valves should have provisions for pressure relief. While every effort has been made to assure accuracy, Total Control Systems makes no representation, warranty, or guarantee in connection with this publication and hereby expressly disclaims any liability or responsibility for loss or damage resulting from its use or for violation of any federal, state or municipal regulations which this publication may conflict.

Blending
The bio-fuel blends have presented engineers with ability to create various methods for product mixing. Any product delivery requires that each component be capable of accurately flowing in a controlled mode throughout the delivery batch. When choosing a blending system for a terminal, safety and product quality (adherence to the blend specification) should be the main consideration. Other considerations are the initial cost of installation, recurring maintenance costs, flow rates and the range of blend ratios or recipes that can be delivered.

The generally accepted biofuel blending principles include Splash, Sequential and Ratio (In-Line) blending applications.

Splash Blending
Splash blending consist of loading refined fuels with biofuel into a tank truck sequentially by using different loading arms. The operator calculates and controls the blend of each arm manually. The blend ratio is correct only after the components of the blend have been completely loaded.

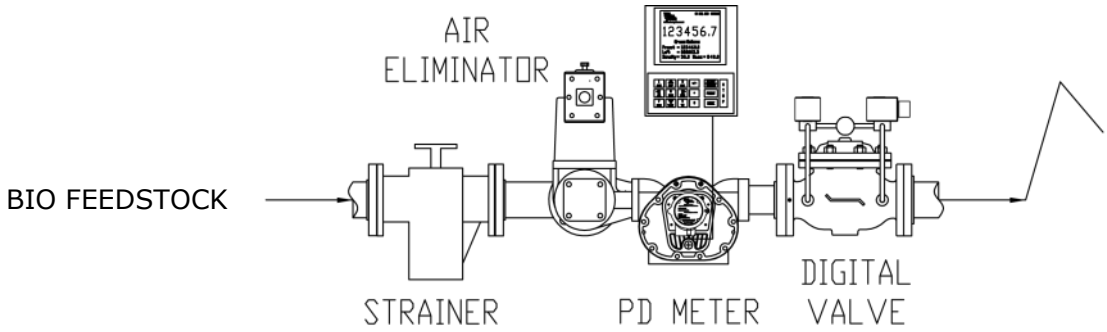

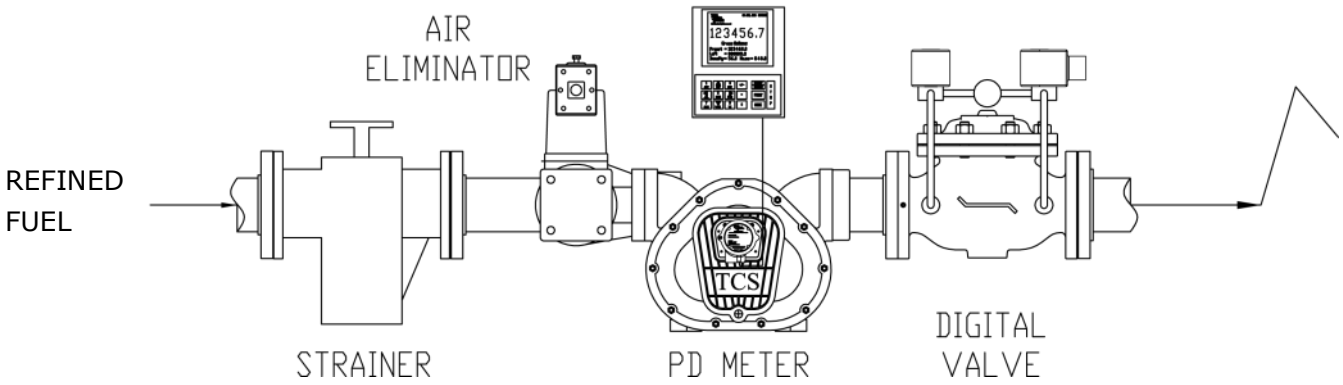

Sequential Blending

Sequential blending consists of loading each blend stock component, one at a time, using a single meter and control valve, delivering into a single load arm into the tank truck. The blend ratio is correct only after all components of the blend have been loaded. Mixing occurs in the truck compartment, during the delivery time to destination, and during fuel offload.

1) Dedicated Meters and Control Valves —The metered blend components are combined at a point downstream of the individual component meters and control valves, delivered into a single load arm and into the compartment.

2) Single Meter and Control Valve — All components flow through a single meter and the flow rate is controlled by a single control valve in the line downstream of the point where the components are introduced into the common line. Each component flows individually through the same meter and control valve into a single load arm for delivery into the compartment.

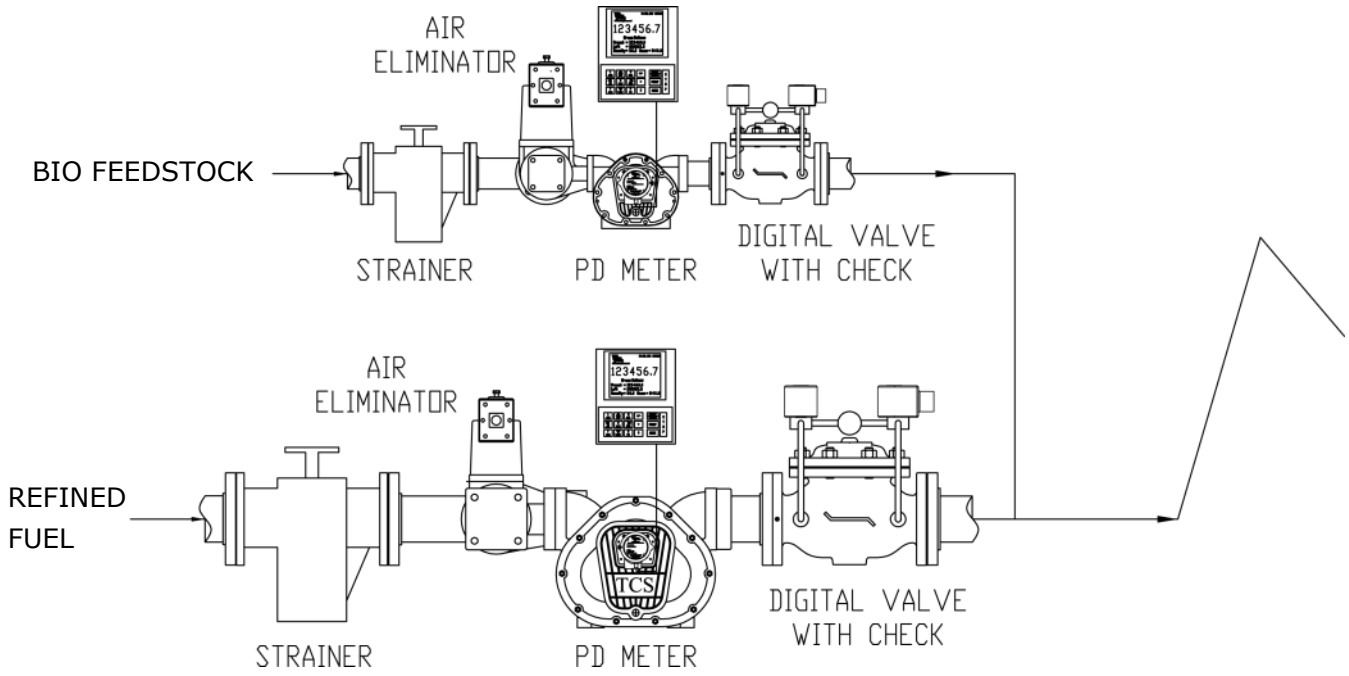

Ratio (In-Line) Blending

Ratio blending (in-line) is the simultaneous loading of two or more product components or blend stocks through separate dedicated meters and control valves to a common blend point. The blended product is transferred to the truck using a single loading arm.

The use of separate dedicated meters for each component allows for accurate calibration of each meter. Ratio blending involves fewer steps for the operator, takes less time than sequential blending and provides a high level of accuracy from blend to blend.

Ratio blending can be either proportional or non-proportional. The proportional blending holds the blend ratio of all components constant throughout the delivery load. The non-proportional blend is accomplished with variable blend concentrations at certain points of delivery.

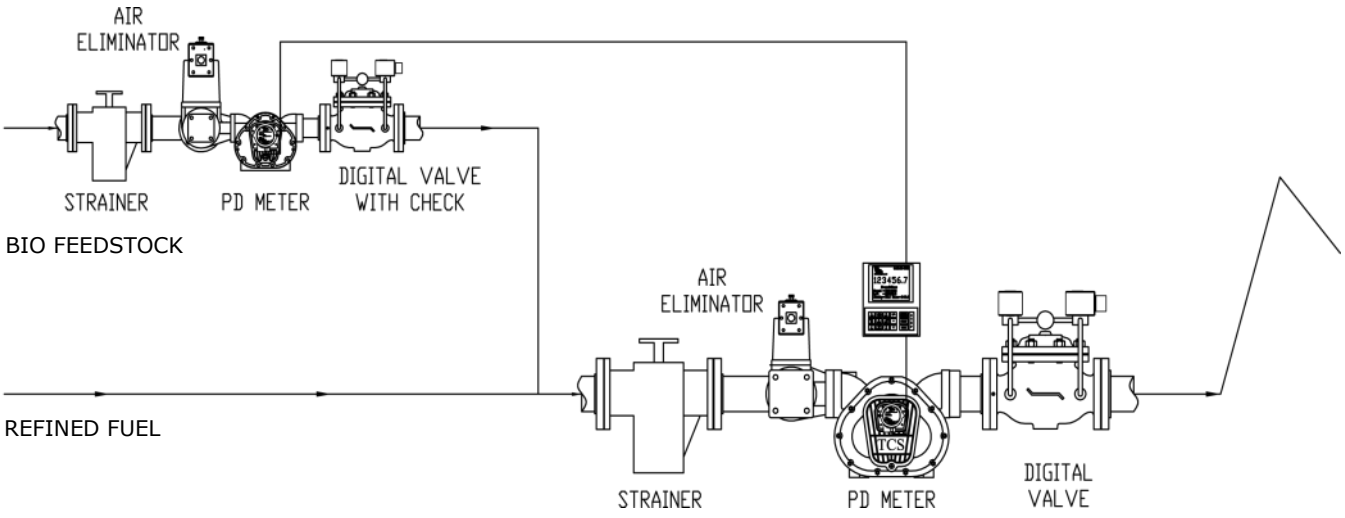

TOTAL CONTROL SYSTEMS

"The Standard of Measurement"

AUTHORIZED DISTRIBUTOR:

Accu-Flo Meter Service Ltd.

1-800-921-ACCU

TCS900023/R10